~~EQUIP. TYPE~~ R-390A/URR ~~EXP. NO.~~

~~COL. 269 172100~~

© OWER GOVERNMENT DRAWINGS SPECIFICATIONS OR OTHER DATA ARE USED ONLY FOR WORK OR OPERATION THE UNITED STATES GOVERNMENT THEREBY INCURS NO RESPONSIBILITY NOR ANY OBLIGATION WHATSOEVER, AND THE FACT THAT THE GOVERNMENT MAY HAVE FORMULATED FURNISHED OR IN ANY WAY SUPPLIED THE SAID DRAWINGS, SPECIFICATIONS OR OTHER DATA IS NOT TO BE REGARDED BY IMPLICATION OR OTHERWISE AS IN ANY MANNER LICENSING THE HOLDER OR ANY OTHER PERSON OR CORPORATION, OR CONVEYING ANY RIGHTS OR PERMISSION TO MANUFACTURE USE OR SELL ANY PATENTED INVENTION THAT MAY IN ANY WAY BE RELATED THERETO.

THIS DOCUMENT HAS BEEN PURCHASED BY THE GOVERNMENT AND MAY BE REPRODUCED AND USED IN CONNECTION WITH ANY GOVERNMENT PROCUREMENT OR MAINTENANCE OPERATION

*FOR INFORMATION ONLY. CONTRACTOR MAY AT HIS OPTION DEVIATE FROM THESE PROCESS DETAILS.

SWE APPROVAL	
SYM	PR:0042-9
B_2	CA84790
C_1	CA84835

REVISIONS

SYM	DESCRIPTION	DATE	APPROVAL
A_4	A_1-1 25/32 DIM. WAS SHOWN INCORRECTLY A_2-1 3/16 WAS 1 1/2 A_3-ADDED MATL/FINISH SPEC TO NOTES A_4-ADDED APPL SM-D-343620	4 NOV 59	42428-PC-59 -81-51 REV'D
B_2	B_1-REVISED ARROWHEAD TO WITNESS LINE B_2-ADDED TYPE II.	28 JUNE 60	42428-PC-59 REV'D
C_1	.187/.184 WAS .186/.184	14-SEP. 60	42428-PC-59 REV'D
D	CORRECTED DIM. PROCEDURE	27 APR 66	6-00189 REV'D PC-28

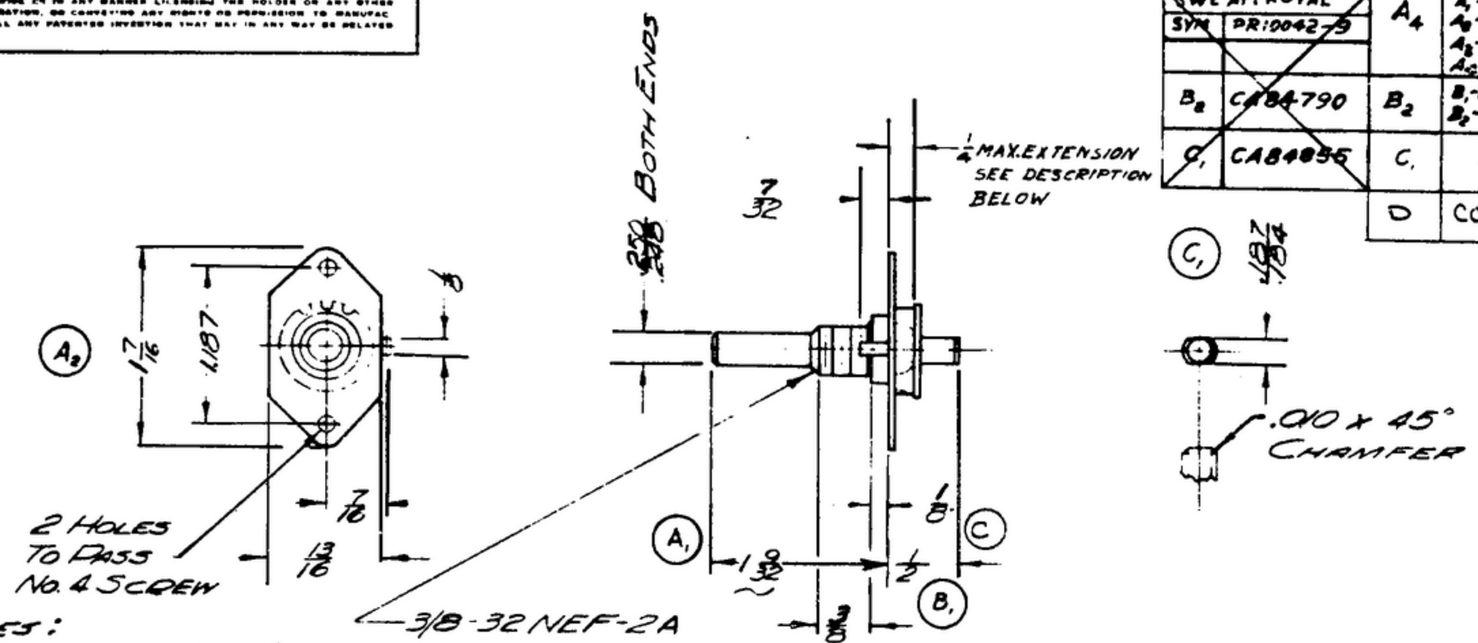

NOTES:

1. PART MAY BE # P5028 AS SUPPLIED BY CENTRALAB DIVISION, GLOVE UNION INC, MILWAUKEE, WIS, OR EQUAL, PROVIDING IT MEETS THE FOLLOWING REQUIREMENTS & DIMENSIONS SHOWN.

DESCRIPTION: ASSEMBLY CONSISTS OF SHAFT, BUSHING SPRING, AND DETENT.
STOPS SHALL BE PROVIDED LIMITING ROTATION TO SIX POSITION.
ANGLE OF DETENT: 30°
DETENT ASSEMBLY IS SHOWN IN EXTREME COUNTERCLOCKWISE POSITION WHEN VIEWED FROM KNOB END.
1/4 MAX EXTENSION OF DETENT ASSEMBLY IN ANY SHAFT POSITION OR BETWEEN ANY TWO SHAFT POSITIONS, INCLUDING STAKING SPACE ON THE SHAFT (SEE DRAWING)

A_3 MATERIALS MUST CONFORM TO SPEC MIL-P-11268
FINISHES MUST CONFORM TO SPEC MIL-F-14072 TYPE II.

~~ECC No. 15000316~~

B_2

A_4

~~COLLINS PART NO.~~	~~ITEM~~	~~REQD~~	~~PART NO.~~	~~DESCRIPTION~~	~~MAT'L~~	~~MAT'L SPEC~~

LIST OF MATERIAL — COLLINS PART NO. ~~559-0175-002~~

~~COLLINS NO.~~	~~QTY~~	NEXT ASSY	USED ON
		SM-D-343620	1
~~559-0363-004~~	1	SM-D-248818	SC-DL-248775

APPLICATION

DRAWN: JENNETT
CHECKED: [illegible]
APPROVED:

UNLESS OTHERWISE SPECIFIED:
DECIMAL DIMENSIONS INCLUDING HOLE SIZES MAY VARY ± .005
FRACTIONAL DIMENSIONS INCLUDING HOLE SIZES MAY VARY ± 1/64
MACHINED ANGLES MAY VARY ± 1°
SHEARED ANGLES MAY VARY ± 30'
BROKEN ANGLES MAY VARY ± 1°
ECCENTRICITY BETWEEN ANY DIAMETERS ON THE SAME CENTERLINE SHALL NOT EXCEED .010 TOTAL INDICATOR READING
ALL DIMENSIONS ARE FINISH DIMENSIONS INCLUDING APPLIED FINISH AND ARE GIVEN IN INCHES

~~COLLINS RADIO CO. CEDAR RAPIDS, IOWA~~
14214 PH
51-93

SIGNAL CORPS
REVIEWED PME
APPROVED HLY PME
DATE 12 JAN 56
SCALE 1/1

DETENT-ROTARY SWITCH

DEPARTMENT OF THE ARMY
SIGNAL CORPS ENGINEERING LABORATORIES
FORT MONMOUTH NEW JERSEY

SM-B-249227

WHEN REFERRING TO THIS DRAWING STATE DRAWING NO., APPLICABLE ISSUE SYMBOL, IF ANY, AND DATE